Perfusion 1999; **14**: 311–315

Progress with the development of the intravenous membrane oxygenator

BG Hattler and **WJ Federspiel**, University of Pittsburgh, Pittsburgh, Pennsylvania

Introduction

Until recently, extracorporeal life support (ECLS), using both veno-venous and veno-arterial bypass circuits, provided the only alternative in the treatment of patients with acute lung failure who could no longer be maintained on ventilators. Because of the continued high mortality rate approaching 50%, the high costs, and the intense personnel requirements for ECLS, this therapy is most often not considered until the patient has deteriorated not only from a respiratory standpoint, but from involvement of multiple other organs. Availability of a simpler, safer, and less costly alternative would provide a rationale for intervening at an earlier stage in these patients and at a time before advanced multiple organ failure has occurred. In this context, intravenous oxygenation, now under development, offers great promise in the treatment of these patients once they can no longer be maintained on ventilators and at a time when pulmonary parenchymal involvement is still reversible. Intravenous oxygenation is simple in concept, requiring the introduction of hollow-fiber membranes within the venous system across which gas exchange takes place while the blood returns to the heart.

One device developed by Mortenson (IVOX) has been through both experimental and early clinical testing and was found to provide gas exchange in humans at a level that meets one-third or less of the patients' basal requirements.[1] This device consists of free-floating, crimped hollow-fiber membranes positioned in the inferior vena cava. The relatively nondisturbed flow of blood past the fibers leads to the exchange of oxygen and carbon dioxide.[2,3]

Our approach to intravenous oxygenation has concentrated on developing a device that actively promotes convective mixing of blood around hollow fibers, thus improving gas-exchange efficiency. A pulsating, centrally placed balloon around which hollow-fiber membranes are arranged has provided an opportunity to vary and test a number of parameters in relation to enhanced convective mixing and gas exchange. Our goal has been to provide consistent and reproducible gas exchange at a clinically significant level, as determined largely by prior users of the IVOX, which is considered to require meeting 50% of basal requirements for oxygen and carbon dioxide exchange within the patient. Since our initial interests in intravenous oxygenation that began in 1984, we have progressed through ten different prototypes with improvement in gas flux at each step. Since 1993, we have stressed the use of matted hollow-fiber membranes arranged around a centrally placed balloon that enhances convective patterns in the fluid phase.[4] The ability to introduce this device and treat patients on an as needed basis would provide for the patient in respiratory failure a similar mode of maintenance and therapy that is available to patients with renal failure. Hence, the term 'respiratory dialysis' has arisen as a descriptive term for this form of therapy that is being developed to treat patients with respiratory failure.[5]

Address for correspondence: BG Hattler, C-700 Presbyterian University Hospital, 200 Lothrop Street, Pittsburgh, PA 15213, USA.

0267–6591(99)PF300OA

Here we briefly summarize some of our recent progress in the development of intravenous oxygenation. Detailed reports covering various aspects of both the theoretical and practical phases of our progress have been published previously.[6–17]

Materials and methods

Our development of an intravenous membrane oxygenator (IMO) has progressed through a series of device configurations. Each series of prototypes has been designated by a capital letter, i.e. A, B, C, D. Although originally abandoned, the D series prototypes have been reconfigured with the hollow fibers changed from free-floating hollow-fiber membranes to fixed matted hollow-fiber membranes arranged with the fiber geometry parallel to the flow of blood. The fibers are potted at distal and proximal manifolds and oxygen is introduced through a partitioned tube. Typically, therefore, oxygen enters the distal manifold and is distributed longitudinally down the fibers that connect to the proximal manifold vacuum port where unused oxygen and the carbon dioxide removed from the blood are exhausted. A centrally placed balloon attached to a helium source inflates and deflates at up to 200 beats per minute, which enhances convective mixing of the blood while also imposing a perpendicular vector to the blood across the fixed fiber mats. The parallel arrangement of the matted hollow fibers allows the device to be compressed and reduced in size for insertion through either the right internal jugular or right common femoral vein.

A mock circulatory loop, designed and constructed to simulate flow conditions in the vena cava is used in the testing of all devices initially (Figure 1). For each *in vitro* study, the IMO prototype was positioned in a holding chamber 1 inch in diameter and the test performed in water. A mass spectrometer allows for online gas measurements with oxygen and carbon dioxide exchange rates normalized to membrane surface area.

For *in vivo* experiments fully monitored 100 kg calves are used. The device is introduced directly through the right internal jugular vein and positioned so that it occupies the terminal superior vena cava, the right atrium, and the inferior vena cava. The device does not occupy the entire circumference of any of these vessels and is dependent on the balloon pulsation to capture all of the surrounding blood, thus eliminating what would otherwise be a large shunt fraction.

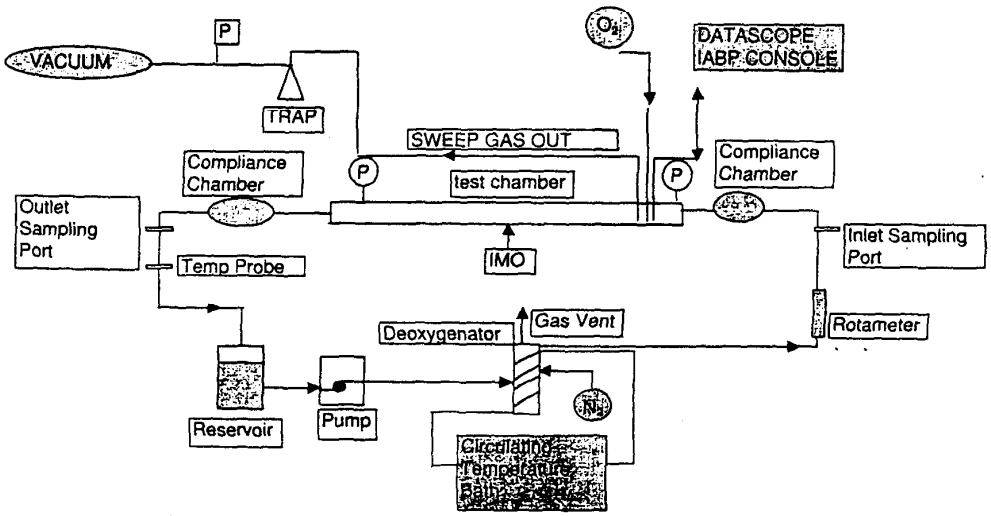

Figure 1 Schematic of intravenous membrane oxygenator (IMO) *in vitro* characterization loop

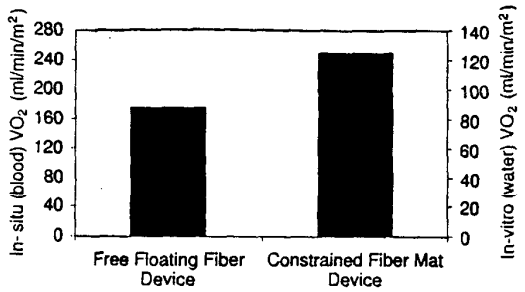

Figure 2 Gas exchange levels are shown comparing devices with free-floating or constrained fiber mats measured during *in vitro* bench testing, normalized to device surface area. Gas exchange in blood is estimated from tests in water as previously described.

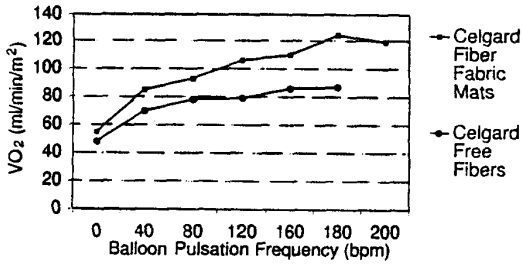

Figure 3 Gas exchange measured in water, showing the improved O_2 exchange with the fiber mats and the enhanced gas flux at higher balloon pulsation frequencies

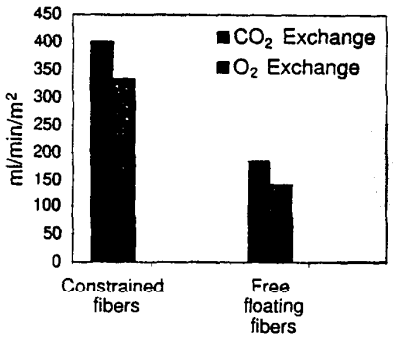

Figure 4 Gas exchange levels are shown *in vivo*, comparing devices with free-floating or constrained fiber mats. Devices are otherwise identical except for the fiber configurations.

Results

A comparison between devices with free floating fibers and devices with fixed mats is shown in Figures 2 and 3. Gas exchange levels are shown as those directly measured during bench testing in water, normalized to device surface area, as well as estimated gas exchange in blood which we have shown corresponds to a value that is two-fold greater than those levels measured in water.[10] Increased pulsation frequency leads to enhanced gas exchange. Constrained vs free fibers demonstrate significant improvement in gas exchange in a setting where the devices were identical in every respect except for the fiber configuration.

In vivo testing of the IMO prototype was carried out in calves in acute experiments performed over a 6–8 h period. Constrained and free-floating fiber devices were compared (Figure 4). The superior gas exchange achieved *in vitro* with the constrained fiber prototypes was also demonstrated *in vivo*. The constrained fiber prototype doubled the gas exchange rates achieved with the free floating fiber prototypes. A maximum O_2 delivery rate of 336 ml/min/m^2 and a CO_2 removal rate of 402 ml/min/m^2 was seen at a balloon pulsation frequency of 150 beats/min. Neither constrained fiber mat nor free-floating fiber devices demonstrated any significant change in hemodynamics, comparing values pre- and post-device insertion, despite prolonged periods of balloon pulsation. This included measurements of cardiac output, mean arterial pressure, pulmonary artery pressure, central venous and vena caval pressures. Average levels of plasma free hemoglobin from five experiments reached levels of 5, 25, and 27 mg% at 1, 4, and 6 h, respectively.

Discussion

Our development efforts in the past have focused on increasing the efficiency of gas exchange with the IMO by using a centrally positioned pulsating balloon within the fiber bundle to actively promote fluid mixing and reduce the liquid boundary layer present at the interface between the membrane wall and the red cells. This micrometer layer of liquid can act as a significant barrier to gas exchange which is improved as this layer is disrupted. Ideally, oxygenators in the venous system would function at the limits of the hollow-fiber membranes' gas exchange

capabilities once this liquid boundary layer is removed. In practice, this layer of fluid is never totally removed, and oxygenators function at the limit of the liquid boundary layer rather than that of the membrane itself. The improved gas exchange that we have observed at increasingly rapid balloon pulsation frequencies are believed to relate to a great degree to the effect produced by the pulsating balloon at the level of the liquid boundary layer.

Recently, we have determined that the status of the fiber surrounding the balloon is also important in further enhancing gas exchange. The use of constrained fiber bundles have allowed us to reach levels of gas exchange that exceed our target level of 50% basal requirements in humans (130 ml/min of CO_2 and O_2). Under these conditions, devices up to 0.5 m^2 surface area introduced into the central venous system would be necessary. Devices of this size, but with free-floating fibers, were used in the clinical trial of the IVOX without compromising hemodynamics.[1] With the use of constrained fibers and active balloon mixing, significantly smaller devices should be possible, facilitating both the insertion and removal of the intravenous membrane oxygenator. In our experiments, the superior exchange rates can be attributed not only to the pulsating balloon, but to the constrained fiber bundles. Constrained fiber bundle prototypes performed considerably better than devices with free-floating fibers which were otherwise identical and were exposed to comparable balloon pulsation dynamics. The key to the success of these constrained prototypes is their uniformly spaced fibers, which eliminate preferential pathways for flow and the fixed nature of the fiber mat, which enhances the velocity of blood flow across each individual fiber. Free fiber devices exhibit reduced gas exchange because their fiber orientation and disposition relative to the blood flow creates preferential channels that allow blood to bypass the bundle without being oxygenated. In addition, these nonfixed fibers move with the force vectors created by the pulsating balloon, reducing the relative velocity (compared to stationary fibers) as it relates to crossflow past the fibers. This has a detrimental effect on gas exchange that can be corrected by keeping the fibers stationary relative to the perpendicular flow of blood.

Conclusion

Intravenous oxygenation represents an attractive alternative to the treatment of patients with acute lung injury because of its relatively simple, potentially safer conduct, and significantly less expensive approach when compared to ECMO. The only clinical trial of intravenous oxygenation (IVOX) was conducted by Mortenson and showed that up to 28% of basal gas exchange requirements could be provided in patients with acute lung injury. This level of gas exchange was helpful in some instances, but participants in the trial determined that consistent and reproducible gas exchange that reached a level of 50% of basal requirements in patients should enhance the clinical usefulness of such a device. This goal has been reached with the IMO and now requires further long-term testing in animals before proceeding to clinical trials in human patients.

References

1 Conrad SA, Zwischenberger JB, Eggerstedt JM, Bidani A. *In vivo* gas transfer performance of the intravascular oxygenator in acute respiratory failure. *Artif Org* 1994; **18**: 840–45.

2 Mortensen JD. An intravenacaval blood gas exchange device: preliminary report. *Trans Am Soc Artif Int Org* 1987; **33**: 570–73.

3 Mortensen JD, Berry G. Conceptual and design features of a practical clinically effective, intravenous, mechanical blood oxygen/carbon dioxide exchange device (IVOX). *Int J Artif Org* 1989; **12**: 384–89.

4 Hattler BG, Reeder GD, Sawzik PJ *et al.* Development of an intravenous membrane oxygenator (IMO): enhanced intravenous gas exchange through convective mixing of blood around hollow fiber membranes. *Artif Org* 1994; **18**: 806–12.

5 Hattler BG, Johnson PC, Sawzik PJ *et al.* 'Respiratory dialysis:' a new concept in pulmonary support. *ASAIO J* 1992; **38**: M296–300.

6 Reeder GD, Hattler BG, Rawleigh J *et al.* Current progress in the development of an intravenous membrane oxygenator. *ASAIO J* 1993; **39**: M461–65.

7 Federspiel WJ, Williams JJ, Hattler BG. Gas flow dynamics in hollow fiber membranes. *AIChE J* 1996; **42**: L2094–99.

8 Lund L, Federspiel WJ, Hattler BG. Gas permeability of hollow fiber membranes in a gas–liquid system. *J Membr Sci* 1996; **117**: 207–19.

9 Federspiel, WJ, Hattler BG. Sweep gas flowrate and CO_2 exchange in artificial lungs. *Artif Org* 1996; **20**: 1050–56.
10 Konishi R, Shimizu R, Firestone L *et al.* Nitric oxide presents human platelet adhesion on fiber membrane in whole blood. *ASAIO J* 1996; **42**: M850–53.
11 Macha M, Federspiel WJ, Lund L *et al.* Acute *in vivo* studies of the Pittsburgh intravenous membrane oxygenator. *ASAIO J* 1996; **42**: M609–15.
12 Lund L, Federspiel WJ, Taitel F, Hattler BG. A novel method for measuring hollow fiber membrane permeability in a gas-liquid system. *ASAIO J* 1996; **42**: M446–51.
13 Federspiel WJ, Hewitt T, Hout M *et al.* Recent progress in engineering the Pittsburgh intravenous membrane oxygenator. *ASAIO J* 1996; **42**: M435–442.
14 Federspiel WJ, Sawzik P, Borovetz HS, Reeder HS, Hattler BG. Temporary support of the lungs – the artificial lung. In: Cooper DKC, Miller LW, Patterson GA eds. *The transplantation and replacement of thoracic organs*. Boston, MA: Kluwer, 1996.
15 Federspiel WJ, Hout MS, Hewitt TJ *et al.* Development of a low flow resistance intravenous oxygenator. *ASAIO J* 1997; **43**: M725–30.
16 Hewitt TJ, Hattler BG, Federspiel WJ. A mathematical model of gas exchange in an intravenous membrane oxygenator. *Ann Biomed Eng* 1998; **26**: 166–78.
17 Lund LW, Hattler BG, Federspiel WJ. Is condensation the cause of plasma leakage in microporous hollow fiber membrane oxygenators. *J Membr Sci* 1998; **147**: 87–93.